KARMA

Stove Range

GNC-C-900

Model	GNC-C-900	ENC-C-900	GNC-C-700	ENC-C-700
Description	Gas Pasta Cooker with Cabinet	Electric Pasta Cooker with Cabinet	Gas Pasta Cooker with Cabinet	Electric Pasta Cooker with Cabinet
Volts	-	380V/50Hz	-	380V/50Hz
Power	22/ 80523 (KW/BTU)	18000W	22/ 80523 (KW/BTU)	12000W
Capacity	-	-	-	-
Dimensions (mm)	800x900x(850+70)	800x900x(850+70)	700x700x(850+70)	700x700x(850+70)
N.W. (kg)	100	86	82	75
Certificate	-	-	-	-

KARMA GLOBAL LTD. info@karmaglobal.com www.karmaglobal.com

KARMA

Stove Range

GLSB-C-900

Model	GLSB-C-900	ELSB-C-900	GLSB-C-750	ELSB-C-750
Description	Gas Lava Rock Grill with Cabinet	Electric Lava Rock Grill with Cabinet	Gas Lava Rock-Grill with Cabinet	Electric Lava Rock Grill with Cabinet
Volts	-	380V/50Hz	-	380V/50Hz
Power	17 / 58004 (KW/BTU)	12000W	14.4/19132 (KW/BTU)	9000W
Capacity	-	-	-	-
Dimensions (mm)	800x900x(850+70)	800x900x(850+70)	700x700x(850+70)	700x700x(850+70)
N.W. (kg)	128	128	113	95
Certificate	CE	-	CE	-

KARMA GLOBAL LTD. info@karmaglobal.com www.karmaglobal.com

KARMA

Stove Range

GFDT-C-900

Model	GFDT-C-900	EFDT-C-900	GFDT-C-750	EFDT-C-750
Description	Gas 2-Tank Fryer (2-Baskets) with Cabinet	Electric 2-Tank Fryer (2-Baskets) with Cabinet	Gas 2-Tank Fryer (2-Baskets) with Cabinet	Electric 2-Tank Fryer (2-Baskets) with Cabinet
Volts	-	380V/50Hz	-	380V/50Hz
Power	31/105772 (KW/BTU)	24000W	31/105772 (KW/BTU)	24000W
Capacity (L)	(20±2)+(20±2)	(23±2)+(23±2)	(20±2)+(20±2)	(23±2)+(23±2)
Dimensions (mm)	800x900x(850+70)	800x900x(850+70)	700x700x(850+70)	700x700x(850+70)
N.W. (kg)	103	94	85	77
Certificate	CE	-	CE	-

KARMA GLOBAL LTD. info@karmaglobal.com www.karmaglobal.com

KARMA

Stove Range

GBM-C-900

Model	GBM-C-900	EBM-C-900	GBM-C-750	EBM-C-750
Description	Gas Bain Marie with Cabinet	Electric Bain Marie with Cabinet	Gas Bain Marie with Cabinet	Electric Bain Marie with Cabinet
Volts	-	380V/50Hz	-	380V/50Hz
Power	6/20472 (KW/BTU)	6000W	6/20472 (KW/BTU)	5000W
Capacity	-	-	-	-
Dimensions (mm)	800x900x(850+70)	800x900x(850+70)	700x700x(850+70)	700x700x(850+70)
N.W. (kg)	90	86	77	68
Certificate	-	-	-	-

KARMA GLOBAL LTD. info@karmaglobal.com www.karmaglobal.com

KARMA

Stove Range

GG-C-900

Model	GG-C-900	EG-C-900	GG-C-750	EG-C-750
Description	Gas Gr iddle (2/3 Flat & 1/3 Grooved) With Cabinet	Electric Griddle (2/3 Flat & 1/3 Grooved) With Cabinet	Gas Gr iddle (2/3 Flat & 1/3 Grooved) With Cabinet	Electric G riddle (2/3 Flat & 1/3 Grooved) With Cabinet
Volts	-	380V/50Hz	-	380V/50Hz
Power	11.8/40262 (KW/BTU)	12000W	11.8/40262 (KW/BTU)	9000W
Capacity	-	-	-	-
Dimensions (mm)	800x900x(850+70)	800x900x(850+70)	700x700x(850+70)	700x700x(850+70)
N.W. (kg)	125	124	95	86
Certificate	CE	-	CE	-

KARMA GLOBAL LTD. info@karmaglobal.com www.karmaglobal.com

KARMA

Stove Range

GG-O-900

Model	GG-O-900	EG-O-900	GG-O-750	EG-O-750
Description	Gas Griddle (2/3 Flat & 1/3 Grooved) With Oven	Electric Griddle (2/3 Flat & 1/3 Grooved) With Oven	Gas Griddle (2/3 Flat & 1/3 Grooved) With Oven	Electric Griddle (2/3 Flat & 1/3 Grooved) With Oven
Volts	-	380V/50Hz	-	380V/50Hz
Power	11.8+5.8/60051 (KW/BTU)	16800W	11.8+5.8/60051 (KW/BTU)	13800W
Capacity	-	-	-	-
Dimensions (mm)	800x900x(850+70)	800x900x(850+70)	700x700x(850+70)	700x700x(850+70)
N.W. (kg)	178	177	148	139
Certificate	-	-	-	-

KARMA GLOBAL LTD. info@karmaglobal.com www.karmaglobal.com

KARMA

Stove Range

GVS4B-O-900

Model	GVS4B-O-900	GVS4B-EO-900	GVS4B-O-750	GVS4B-EO-750
Description	Gas Range With 4-Burner & Oven	Gas Range With 4-Burner & Electric Oven	Gas Range With 4-Burner & Oven	Gas Range With 4-Burner & Electric Oven
Volts	-	380V/50Hz	-	380V/50Hz
Power	37/125560 (KW/BTU)	36/106000 (KW/BTU)	37/125560 (KW/BTU)	36/106000 (KW/BTU)
Capacity	-	-	-	-
Dimensions (mm)	800x910x(850+70)	800x900x(850+70)	700x700x(850+70)	700x700x(850+70)
N.W. (kg)	156	136	117	111
Certificate	CE	-	CE	-

KARMA GLOBAL LTD. info@karmaglobal.com www.karmaglobal.com

KARMA

Stove Range

ERC4B-C-700

Model	ERC4B-C-750	ERC4B-O-750
Description	Electric 4 Ceramic Hob with Cabinet	Electric 4 Ceramic Hob with Oven
Volts	380V/50Hz	380V/50Hz
Power	7.2	12.8
Capacity	-	-
Baking Chamber Dimensions	-	520x520x200
Dimensions (mm)	700x700x(850+70)	700x700x(850+70)
N.W. (kg)	66	94
Certificate	-	-

KARMA GLOBAL LTD. info@karmaglobal.com www.karmaglobal.com

KARMA

Stove Range

GTB-900

Model	GTB-900	ETB-900	GTB-700	ETB-700
Description	Tilted Gas Braising Pan	Tilted Electric Braising Pan	Tilted Gas Braising Pan	Tilted Electric Braising Pan
Volts	-	380V/50Hz	-	380V/50Hz
Power	21/81888 (KW/BTU)	12000W	18/61416 (KW/BTU)	9300W
Capacity	80L	80L	60L	60L
Dimensions (mm)	800x900x(850+70)	800x900x(850+70)	8 00x700x(850+70)	8 00x700x(850+70)
N.W. (kg)	140	135	122	122
Certificate	-	-	-	-

KARMA GLOBAL LTD. info@karmaglobal.com www.karmaglobal.com

KARMA

Stove Range

GHPC-C-900

Model	GHPC-C-900	GHPC-C-750
Description	Gas French Hot-Plate Cooker With Cabinet	Gas French Hot-Plate Cooker With Cabinet
Volts	-	-
Power	10/34120 (KW/BTU)	10/34120 (KW/BTU)
Capacity	-	-
Dimensions (mm)	800x900x(850+70)	700x700x(850+70)
N.W. (kg)	112	87
Certificate	-	-

KARMA GLOBAL LTD. info@karmaglobal.com www.karmaglobal.com

KARMA

Stove Range

ESK-900-100L

Model	ESK-900-100L	ESK-900-150L	ESK-750-60L
Description	Electric Soup Kettle	Electric Soup Kettle	Electric Soup Kettle
Volts	380V/50Hz	380V/50Hz	380V/50Hz
Power (KW)	18	24	12
Capacity (L)	100	150	60
(kPa)	≦50	≦50	≦50
Dimensions (mm)	800x900x(850+70)	800x900x(850+70)	700x700x(850+70)
N.W. (kg)	122.5	130	88
Certificate	-	-	-

KARMA GLOBAL LTD. info@karmaglobal.com www.karmaglobal.com

KARMA

Stove Range

GSK-900-100L

Model	GSK-900-100L	GSK-900-150L	GSK-750-60L
Description	Gas Soup Kettle	Gas Soup Kettle	Gas Soup Kettle
Volts	-	-	-
Power	25/93858 (KW/BTU)	25/93858 (KW/BTU)	16/78476 (KW/BTU)
Capacity (L)	100	150	60
(kPa)	≦ 50	≦ 50	≦ 50
Dimensions (mm)	800x900x(850+70)	800x900x(850+70)	700x700x(850+70)
N.W. (kg)	137	140	112
Certificate	-	-	-

KARMA GLOBAL LTD. info@karmaglobal.com www.karmaglobal.com

Stove Range

GHPC-O-900

EHPC-C-900

Model	GHPC-O-900	GHPC-O-750	EHPC-C-900	EHPC-C-750
Description	French Hot-Plate Cooker & Oven	French Hot-Plate Cooker & Oven	Electric 4-Plate Cooker With Oven	Electric 4-Plate Cooker With Cabinet
Volts	-	-	380V/50Hz	380V/50Hz
Power	15800W	15800W	9200W	9200W
Capacity	-	-	-	-
Dimensions (mm)	800x900x(850+70)	700x700x(850+70)	800x900x(850+70)	700x700x(850+70)
N.W. (kg)	165	122	63	55
Certificate	-	-	-	-

KARMA GLOBAL LTD. info@karmaglobal.com www.karmaglobal.com

KARMA

Stove Range

GVS6B-O-900

Model	GVS6B-O-900	GVS6B-O-750	GVS6B-EO-900	GVS6B-EO-750
Description	Gas Range With 6-Burner & Oven	Gas Range With 6-Burner & Oven	Gas Range With 6-Burner & Electric Oven	Gas Range With 6-Burner & Electric Oven
Volts	-	-	380V/50Hz	380V/50Hz
Power	52.6/178790 (KW/BTU)	52.6/178790 (KW/BTU)	51600W	51600W
Oven Power	-	-	4.8KW	4.8KW
Dimensions (mm)	1200x900x(850+70)	1050x700x(850+70)	1200x900x(850+70)	1050x700x(850+70)
N.W. (kg)	208	155	179	144
Certificate	CE	CE	-	-

KARMA GLOBAL LTD. info@karmaglobal.com www.karmaglobal.com

KARMA

Stove Range

GVS4B-PC-U900

Model	GVS4B-PC-U900	GVS4B-PC-U750
Description	Gas Range With 4-Burner With Cabinet (Pa board)	Gas Range With 4-Burner With Cabinet (Pa board)
Temp (℃)	-	-
Burners Power (KW/BTU)	2x4.5+2x7.5/103490	2x3.5+2x4.5/54590
Gas Oven Power (KW)	-	-
Dimensions (mm)	800x900x(850+70)	700x700x(850+70)
N.W. (kg)	192	168
Certificate	CE	CE

KARMA GLOBAL LTD. info@karmaglobal.com www.karmaglobal.com

KARMA

Stove Range

GVS4B-O-U900

GVS4B-C-U900

Model	GVS4B-O-U900	GVS4B-O-U750	GVS4B-C-U900	GVS4B-C-U750
Description	Gas Range With 4-Burner & Oven	Gas Range With 4-Burner & Oven	Gas Range With 4-Burner With Cabinet	Gas Range With 4-Burner With Cabinet
Temp (℃)	120~330	120~330	-	-
Burners Power (KW/BTU)	5.8+4.5+2x7.5/103490	4x7.8/54590	2x4.5+2x7.5/103490	2x3.5+2x4.5/54590
Gas Oven Power (KW)	5.8	5.8	-	-
LPG Gas Pressure (Pa)	2800~3700	2800~3700	2800~3700	2800~3700
LPG Gas Consumption (kg/h)	2.10	1.54	1.73	1.18
NG Gas Pressure (Pa)	2000~2500	2000~2500	2000~2500	2000~2500
NG Gas Consumption (m3/h)	2.81	2.07	2.33	1.57
Gas Inlet Size	R1 3/4"	R1 3/4"	R1 3/4"	R1 3/4"
Hight Of Working Table (mm)	850	850	850	850
Dimensions (mm)	800x910x(850+70)	700x700x(850+70)	800x900x(850+70)	700x700x(850+70)
Oven Chamber Size (mm)	560x700x270	560x600x270	-	-
Certificate	CE	CE	CE	CE

KARMA GLOBAL LTD. info@karmaglobal.com www.karmaglobal.com

KARMA

Stove Range

GVS6B-O-U900

GVS6B-C-U900

Model	GVS6B-O-U900	GVS6B-O-U750	GVS6B-C-U900	GVS6B-C-U750
Description	Gas Range With 6-Burner & Oven	Gas Range With 6-Burner & Oven	Gas Range With 6-Burner With Cabinet	Gas Range With 6-Burner With Cabinet
Temp (℃)	120~330	120~330	-	-
Burners Power (KW /BTU)	3x4.5+3x7.5/122830	7.8x6/81888	3x7.5+4.5x3/122830	3x4.5+3x3.5/81888
Gas Oven Power (KW)	5.8	5.8	-	-
LPG Gas Pressure (Pa)	2800~3700	2800~3700	2800~3700	2800~3700
LPG Gas Consumption (kg/h)	2.96	2.57	2.4	1.64
NG Gas Pressure (Pa)	2000~2500	2000~2500	2000~2500	2000~2500
NG Gas Consumption (m3/h)	3.98	3.45	3.49	3.38
Gas Inlet Size	R1 3/4"	R1 3/4"	R1 3/4"	R1 3/4"
Hight Of Working Table (mm)	850	850	850	850
Dimensions (mm)	1200x900x(850+70)	1050x700x(850+70)	1200x900x(850+70)	1050x700x(850+70)
Oven Chamber Size (mm)	560x700x270	560x600x270	-	-
Certificate	CE	CE	CE	CE

KARMA GLOBAL LTD. info@karmaglobal.com www.karmaglobal.com

KARMA

Stove Range

CE600-125

CE600-126

CE600-127

Model	CE600-125	CE600-126	CE600-127
Description	Gas Ranges	Gas Ranges	Gas Ranges
Gas Connection	3/4" NPT Gas Connection	3/4" NPT Gas Connection	3/4" NPT Gas Connection
BTU (Open Burners)	30,000x4	30,000x6	30,000x10
BTU (Oven)	30,000	30,000	30,000x2
Legs	15cm	15cm	15cm
Oven Thermostat	50-320℃	50-320℃	50-320℃
N.W. (kg)	132	167	285
Dimensions (mm)	609x828x1520	915x828x1520	1524x828x1520
Certificate	-	-	-

KARMA GLOBAL LTD.
info@karmaglobal.com
www.karmaglobal.com

KARMA

Stove Range

GFDT-C-900S

CE700-181

CE700-313

Model	GFDT-C-900S	GFDT-C-750S	CE700-181	CE700-313
Description	Gas 1 - Tank Fryer (1 - Basket)	Gas 1 - Tank Fryer (1 - Basket)	Gas Fryer(2-Baskets) Two Tube Burners	Gas Fryer(2-Baskets) Three Tube Burners
Power	15.5/52886 (KW/BTU)	15.5/52886 (KW/BTU)	-	-
Capacity (L)	20±2	20±2	-	-
Dimensions (mm)	400x900x(850+70)	360x700x(850+70)	710x400x1120	700x500x1120
N.W. (kg)	60	53	41.3	48.8
Certificate	CE	CE	-	-

KARMA GLOBAL LTD. info@karmaglobal.com www.karmaglobal.com

KARMA

Stove Range

GF-G-10DT

EF-28DT

GS-4B

GG-600F

Model	GF-G-10DT	EF-28DT	GS-4B	GG-600F
Description	Counter Top Gas Fryer	Counter Top Electric Fryer	Counter Top Gas Stove	Counter Top Gas Griddle
Volts	-	220~240V/50Hz	-	-
Power	11.2 / 38215 (KW/BTU)	3.25 + 3.25 (KW)	14/48450 (KW/BTU)	8.4/28660 (KW/BTU)
Capacity (L)	6 + 6	8 + 8	-	-
Dimensions (mm)	600x612x470	600x600x430	570x612x470	600x612x470
Tank Dimensions (mm)	300X240X150	240X300X200	-	-
Grilled Board Size (mm)	-	-	-	590x434x16
Grilled Plate Thickness (mm)	-	-	-	16
N.W. (kg)	33	25	39	49
Certificate	-	-	-	-

KARMA GLOBAL LTD. info@karmaglobal.com www.karmaglobal.com

KARMA

Stove Range

EEHG-50

EHNC-60

GLB-650W

EHB-50

Model	EEHG-50	EHNC-60	GLB-650W	EHB-50
Description	Counter Top Electric Griddle	Counter Top Pasta Cooker	Counter Top Gas Lava Rock Grill	Counter Top Electric Lava Rock Grill
Volts	220~240V/50Hz	220~240V/50Hz	-	220~240V/50Hz
Power	5KW	6KW	16.8 / 57320 (KW/BTU)	7.2 KW
Dimensions (mm)	600x600x350	600x600x350	650x612x470	650x600x350
Grilled Board Size (mm)	536x330x16	-	-	-
Roasting Surface (mm)	-	-	570x350	570x350
N.W. (kg)	43	25	46	38
Certificate	-	-	-	-

KARMA GLOBAL LTD. info@karmaglobal.com www.karmaglobal.com

KARMA

Stove Range

EBM-15

EHHC-4-15

ESC01-4HA

Model	EBM-15	EHHC-4-15	ESC01-4HA
Description	Counter Top Electric Bain Marie	Counter Top Electric 4- Plate Cooker	Table-top Electrical Ceramic Hob
Volts	220~240V/50Hz	220~240V/50Hz	380V/50Hz
Power (KW)	1.5	8	4.5
Dimensions (mm)	700x600x350	600x600x350	650x600x350
N.W. (kg)	24	31.4	45
Certificate	-	-	-

KARMA GLOBAL LTD. info@karmaglobal.com www.karmaglobal.com

KARMA

Mini Stove Range

CE270-164

CE270-165

CE270-166

CE270-167

Model	CE270-164	CE270-165	CE270-166	CE270-167
Description	Mini Fryer	Mini Griddle	Mini Pasta Cooker	Mini Bain Marie
Volts	220~240V 50~60Hz	220~240V 50~60Hz	220~240V 50~60Hz	220~240V 50~60Hz
Power (W)	2000	1500	1500	1500
Material	S/S	S/S	S/S	S/S
Dimensions (mm)	260x360x260	260x360x260	260x360x260	260x360x260
N.W. (kg)	5.3	7.8	5	4.9
Certificate	CE	CE	CE	CE

KARMA GLOBAL LTD. info@karmaglobal.com www.karmaglobal.com

Gas Stove

GST01-4BA

Model	GST01-1BA	GST01-2BA	GST01-4BA	GST01-6BA
Description	1 Burner Gas Stove	2 Burner Gas Stove	4 Burner Gas Stove	6 Burner Gas Stove
Volts	-	-	-	-
Power	24.7/84280 (KW/BTU)	15.5/53000 (KW/BTU)	25.2/86000 (KW/BTU)	46.6/159000 (KW/BTU)
Dimensions (mm)	530X460X500	300X770X360+60	600X770X360+60	900X770X360+60
N.W. (kg)	47	34	59	84
Certificate	-	-	-	-

KARMA GLOBAL LTD. info@karmaglobal.com www.karmaglobal.com

KARMA

Stove Range

ECS40-ENC

ECS40-EFR

Model	ECS40-ENC	ECS60-ENC	ECS40-EFR	ECS60-EFR
Description	Desktop Electric Pasta Cooker	Desktop Electric Pasta Cooker	Desktop Electric Fryer	Desktop Electric Fryer
Volts	380V/50Hz	380V/50Hz	380V/50Hz	380V/50Hz
Power (KW)	5.4	9	8.5	8.5x2
Capacity (L)	15	24	8-10	(8-10)x2
Dimensions (mm)	400x650x475	600x650x475	400x650x475	600x650x475
Height Of Working Table (mm)	335	335	335	335
Drainage Outlet Size (mm)	R 1/2"	R 1/2"	R 1/2"	R 1/2"
Temperature (℃)	0-100	0-100	50-190	50-190
N.W. (kg)	25.6	36	20	35
Certificate	-	-	-	-

KARMA GLOBAL LTD. info@karmaglobal.com www.karmaglobal.com

KARMA

Stove Range

ECS40-EGI

ECS40-ELB

Model	ECS40-EGI	ECS60-EGI	ECS40-ELB	ECS60-ELB
Description	Desktop Electric Griddle	Desktop Electric Griddle	Desktop Electric Lava Rock Grill	Desktop Electric Lava Rock Grill
Volts	380V/50Hz	380V/50Hz	380V/50Hz	380V/50Hz
Power (KW)	3.9	7.8	4.5	7.5
Dimensions (mm)	400x650x475	600x650x475	400x650x475	600x650x475
Height Of Working Table (mm)	327	327	335	335
Grill Height (mm)	14	14	-	-
Grill Board Size (mm)	396x514.5x14	596x510x14	-	-
Drip Box Capacity (L)	1.5	1.5	-	-
Temperature (℃)	50-300	50-300	-	-
N.W. (kg)	43.5	60.4	45	68
Certificate	-	-	-	-

KARMA GLOBAL LTD. info@karmaglobal.com www.karmaglobal.com

KARMA

Stove Range

ECS40-EHP

ECS40-BAM

Model	ECS40-EHP	ECS60-EHP	ECS40-BAM	ECS60-BAM
Description	Desktop Electric Cooker	Desktop Electric Cooker	Top Electric Bain Marie	Top Electric Bain Marie
Volts	220~230V/50Hz	380~415V/50Hz	220~230V/50Hz	220~230V/50Hz
Power (KW)	2.6+2	(2.6+2)x2	0.75	1.2
Dimensions (mm)	400x650x475	600x650x475	400x650x475	600x650x475
Height Of Working Table (mm)	335	335	335	335
N.W. (kg)	19	31.4	17	24.4
Certificate	-	-	-	-

KARMA GLOBAL LTD. info@karmaglobal.com www.karmaglobal.com

Stove Range

ECS60-CBN

Model	ECS40-CBN	ECS60-CBN
Description	400 Cabinet	600 Cabinet
Volts	-	-
Power (KW)	-	-
Dimensions (mm)	400x512x555	600x512x555
Capacity LxWxH (mm)	-	-
Temperature (℃)	-	-
N.W. (kg)	13	15.5
Certificate	-	-

KARMA GLOBAL LTD. info@karmaglobal.com www.karmaglobal.com

KARMA

Stove Range

GCS40-GNC

GCS40-GFR

Model	GCS40-GNC	GCS60-GNC	GCS40-GFR	GCS60-GFR
Description	Counter Top Gas Cooking Stove	Counter Top Gas Cooking Stove	Counter Top Gas Fryer	Counter Top Gas Fryer
Temp (℃)	-	-	120~200	120~200
Power (KW/BTU)	5.6/19107	11.2/38214	5.6/19107	5.6x2/38214
LPG Gas Pressure (Pa)	2800~3700	2800~3700	2800~3700	2800~3700
LPG Gas Consumption (kg/h)	0.6	0.6x2	0.5	0.5x2
NG Gas Pressure (Pa)	2000~2500	2000~2500	2000~2500	2000~2500
NG Gas Consumption (m3/h)	0.71	0.71x2	0.6	0.6x2
Capacity (L)	-	-	10	10x2
Gas Inlet Size	R 1/2"	R 1/2"	R 1/2"	R 1/2"
Drainage Outlet Size	R 1/2"	R 1/2"	R 1/2"	R 1/2"
Hight Of Working Table (mm)	335	335	335	335
Dimensions (mm)	400x650x475	600x650x475	400x650x475	600x650x475
N.W. (kg)	28	39	23	36
Certificate	CE	CE	CE	CE

KARMA GLOBAL LTD. info@karmaglobal.com www.karmaglobal.com

KARMA

Stove Range

GCS40-GST

GCS40-GLB

Model	GCS40-GST	GCS60-GST	GCS40-GLB	GCS60-GLB
Description	Counter Top Clay Pot Furnace Gas	Counter Top Clay Pot Furnace Gas	Counter Top Gas Grill Lava	Counter Top Gas Grill Lava
Power (KW/BTU)	3.5+4.5/27295	3.5x2+4.5x2/54590	7.2/24566	14.4/49132
LPG Gas Pressure (Pa)	2800~3700	2800~3700	2800~3700	2800~3700
LPG Gas Consumption (kg/h)	0.71	0.71x2	0.6	0.6x2
NG Gas Pressure (Pa)	2000~2500	2000~2500	2000~2500	2000~2500
NG Gas Consumption (m3/h)	0.86	0.86x2	0.73	0.73x2
Gas Inlet Size	R 1/2"	R 1/2"	R 1/2"	R 1/2"
Hight Of Working Table (mm)	335	335	335	335
Dimensions (mm)	400x650x475	600x650x475	400x650x475	600x650x475
N.W. (kg)	22	29.8	45	67
Certificate	CE	CE	CE	CE

KARMA GLOBAL LTD. info@karmaglobal.com www.karmaglobal.com

KARMA

Stove Range

GCS40-GRI

Model	GCS40-GRI	GCS60-GRI
Description	Counter Top Gas Griddle	Counter Top Gas Griddle
Temperature (°C)	120~300	120~300
Power KW/BTU)	5/17060	10/34120
LPG Gas Pressure (Pa)	2800~3700	2800~3700
LPG Gas Consumption (kg/h)	0.5	0.5x2
NG Gas Pressure (Pa)	2000~2500	2000~2500
NG Gas Consumption (m3/h)	0.6	0.6x2
Capacity (L)	-	-
Gas Inlet Size	R 1/2"	R 1/2"
Hight Of Working Table (mm)	335	335
Dimensions (mm)	400x650x475	600x650x475
Grilled Board Size (mm)	396x514.5x14	596x514.5x14
Grilled Plate Thickness (mm)	14	14
N.W. (kg)	42	58
Certificate	CE	CE

KARMA GLOBAL LTD. info@karmaglobal.com www.karmaglobal.com

Counter Top Gas Stove

SD800-201

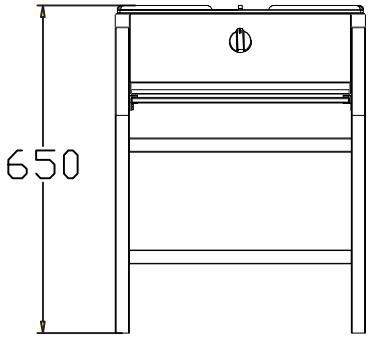

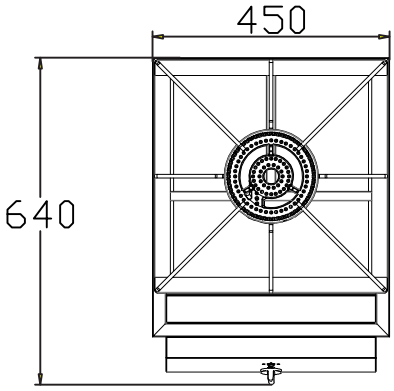

SD800-202

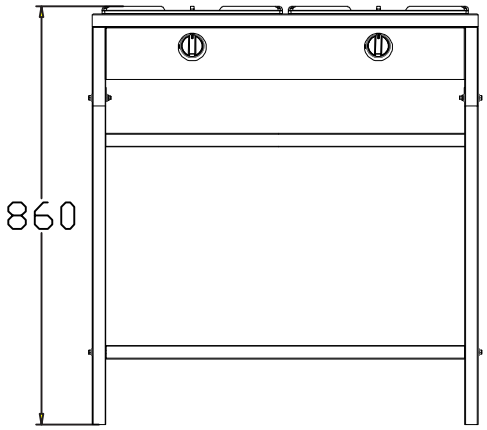

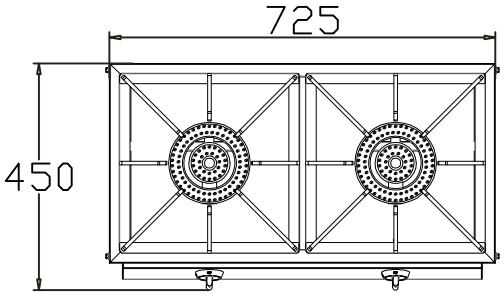

Model	SD800-201	SD800-202
Description	1 Burner Gas Stove	2 Burner Gas Stove
Volts	-	-
Power	4500W	4500Wx2
Material	Stainless Steel	Stainless Steel
Regulators	LPG or Natural Gas	LPG or Natural Gas
Dimensions (mm)	604x450x650	725x450x860
Packing Dimensions (mm)	705x535x325	800x535x325
Certificate	-	-
Remark	1.With Pressure Reducing Valve 2.Removable Assembly Package	

KARMA GLOBAL LTD.
info@karmaglobal.com
www.karmaglobal.com

Counter Top Gas Stove

SD800-203

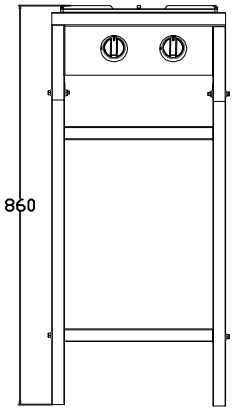

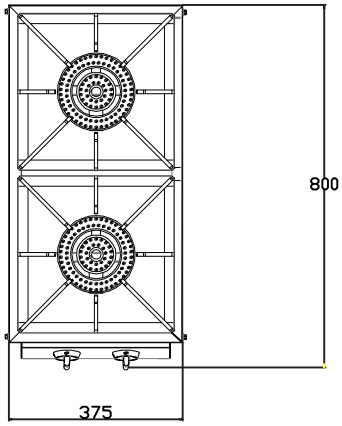

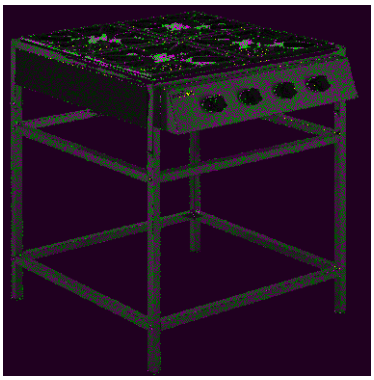

SD800-204

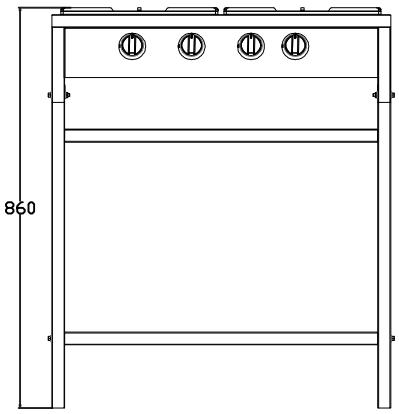

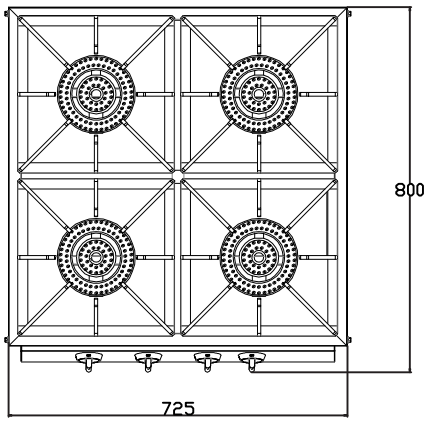

Model	SD800-203	SD800-204
Description	2 Burner Gas Stove	4 Burner Gas Stove
Volts	-	-
Power	4500Wx2	4500Wx4
Material	Stainless Steel	Stainless Steel
Regulators	LPG or Natural Gas	LPG or Natural Gas
Dimensions (mm)	800x375x860	800x725x860
Packing Dimensions (mm)	885x455x325	885x795x325
Certificate	-	-
Remark	1.With Pressure Reducing Valve 2.Removable Assembly Package	

KARMA GLOBAL LTD. info@karmaglobal.com www.karmaglobal.com