Cake Display Counter

FCD07-72BR

Standard Features:

- Bright internal LED illumination on 2 sides
- Digital temperature controller and display
- Fixed chrome plated shelves
- Round double glass
- Ventilated cooling system
- Automatic defrost
- CE

Options:

- Rotational chrome plated shelves

FCD07-72BR	
Capacity-Gross (L)	72
Temperature Range (℃)	0-10
Rated Input Power (W)	170
Refrigerant	R134a/R600a
Type of Climate	N
N.W. (kg)	38.5
G.W. (kg)	41
Overall Dimension (mm)	450x450x983
Package Dimension (mm)	500x500x1050
20"Container	88
40"Container	184
40"Container (high)	184
Color	black

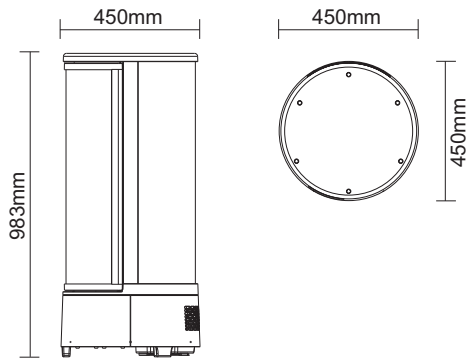

Cake Display Counter

RF100-100

RF100-112

Model	RF100-100	RF100-112
Description	Cake Display Counter	Cake Display Counter
Volts	220~240V/50Hz	220~240V/50Hz
Power(W)	480	180
Capacity(L)	400	100
Shelves	4 (Glass)	3 (Glass)
Temperature Range	2~8℃	2~8℃
Dimensions (mm)	680x680x1750	480x480x1030
N.W.(kg)	125	38
Certificate	CE	CE

Remarks: Bright internal LED light on sides
Round double glass
Automatic defrost

KARMA GLOBAL LTD. info@karmaglobal.com www.karmaglobal.com

Countertop Display

FCD07-105BA

FCD07-120BA

FCD07-160BA

Standard Features:

- Bright internal LED illumination on top
- Digital temperature controller and display
- Adjustable chrome plated shelves
- 4 sides double glass
- Front curved glass
- Sliding doors
- Maintenance free condenser
- Ventilated cooling system
- Automatic defrost
- Stainless steel
- CE

LED Lights

Adjustable Shelf

Digital Controller

FCD07-105BA	
Capacity-Gross (L)	100
Temperature Range (℃)	0-12
Rated Input Power (W)	160
Refrigerant	R134a/R600a
Type of Climate	4
N.W. (kg)	39.1
G.W. (kg)	42.5
Overall Dimension (mm)	682x450x675
Package Dimension (mm)	756x524x760
20"Container	90
40"Container	189
40"Container (high)	189

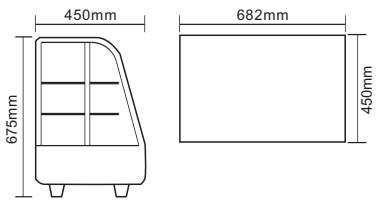

FCD07-120BA	
Capacity-Gross (L)	120
Temperature Range (℃)	0-12
Rated Input Power (W)	230/160
Refrigerant	R134a/R600a
Type of Climate	4
N.W.(kg)	64
G.W.(kg)	66
Overall Dimension (mm)	696x568x686
Package Dimension (mm)	773x627x735
20"Container	81
40"Container	162
40"Container (high)	162

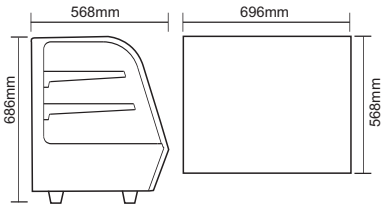

FCD07-160BA	
Capacity-Gross (L)	160
Temperature Range (℃)	0-12
Rated Input Power (W)	230/160
Refrigerant	R134a/R600a
Type of Climate	4
N.W. (kg)	71
G.W. (kg)	73.5
Overall Dimension (mm)	874x568x686
Package Dimension (mm)	951x627x735
20"Container	63
40"Container	126
40"Container (high)	126

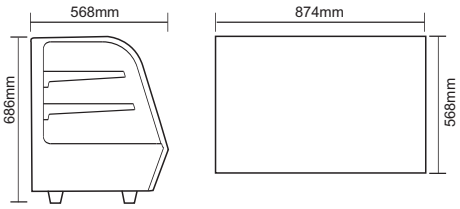

KARMA GLOBAL LTD.
info@karmaglobal.com
www.karmaglobal.com

Countertop Display

FCD07-130BA1

FCD07-160BA2

Standard Features:

- Bright internal LED illumination on top
- Digital temperature controller and display
- Adjustable chrome plated shelves
- 4 sides double glass
- Sliding doors
- Ventilated cooling system
- Automatic defrost
- Stainless steel
- CE

LED Lights

Adjustable Shelf

Digital Controller

FCD07-130BA1

Capacity-Gross (L)	130
Temperature Range (℃)	0-12
Rated Input Power (W)	230/180
Refrigerant	R134a/R600a
Type of Climate	4
N.W. (kg)	56
G.W. (kg)	57
Overall Dimension (mm)	697x578x678
Package Dimension (mm)	773x627x735
20"Container	81
40"Container	162
40"Container (high)	162

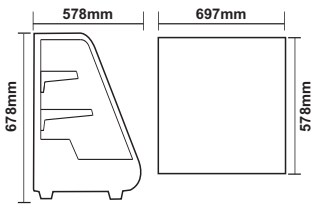

FCD07-160BA2

Capacity-Gross (L)	160
Temperature Range (℃)	0-12
Rated Input Power (W)	230/180
Refrigerant	R134a/R600a
Type of Climate	4
N.W. (kg)	67
G.W. (kg)	69
Overall Dimension (mm)	875x578x678
Package Dimension (mm)	951x627x735
20"Container	63
40"Container	126
40"Container (high)	126

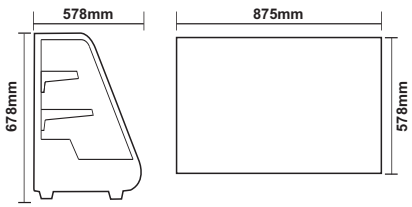

KARMA GLOBAL LTD.
info@karmaglobal.com
www.karmaglobal.com

Countertop Display

FCD07-110BA

Standard Features:

- Bright internal LED illumination on top
- Digital temperature controller and display
- Non-adjustable chrome plated shelf
- 4 sides double glass
- Front Curved glass
- CE

FCD07-110BA	
Capacity-Gross (L)	110
Temperature Range (℃)	2-10
Rated Input Power (W)	300
Refrigerant	R134a/R600A
Type of Climate	N
N.W. (kg)	64.8
G.W. (kg)	67
Overall Dimension (mm)	750x775x640
Package Dimension (mm)	840x810x671
20"Container	42
40"Container	84
40"Container (high)	84

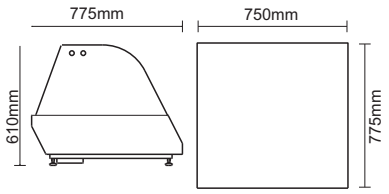

KARMA GLOBAL LTD.
info@karmaglobal.com
www.karmaglobal.com

Flat Glass Door

Lightbox

FCD07-58V

FCD07-58V2

FCD07-68V

FCD07-68V2

Standard Features:

- Internal top LED light
- Adjustable temperature controller
- Adjustable PVC coated shelves
- 4 sides double glass
- Maintenance free condenser
- Ventilated cooling system
- Automatic defrost
- Digital temperature controller and display
- CE

Digital Controller

Lockable

LED Lights

Internal LED Light

Shelf Clips

Options:

- Lockable Door
- Adjustable chrome plated shelves
- Bright internal LED illumination on sides
- Light display box with decal on top

FCD07-58V

Capacity-Gross (L)	58
Temperature Range (℃)	0-12
Rated Input Power (W)	180
Refrigerant	R134a/R600a
Type of Climate	N
N.W. (kg)	30
G.W. (kg)	32
Overall Dimension (mm)	428x386x810
Package Dimension (mm)	475x432x888
20"Container	124
40"Container	258
40"Container (high)	258
Color	white/black/silver/red

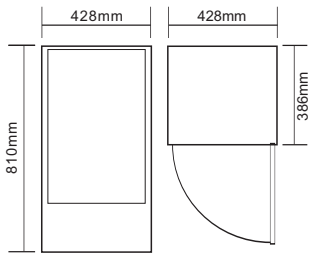

FCD07-58V2

Capacity-Gross (L)	58
Temperature Range (℃)	0-12
Rated Input Power (W)	180
Refrigerant	R134a/R600a
Type of Climate	N
N.W. (kg)	31
G.W. (kg)	33
Overall Dimension (mm)	428x386x925
Package Dimension (mm)	475x432x995
20"Container	124
40"Container	258
40"Container (high)	258
Color	white/black/silver/red

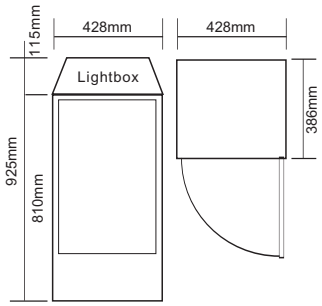

FCD07-68V

Capacity-Gross (L)	68
Temperature Range (℃)	0-12
Rated Input Power (W)	180
Refrigerant	R134a/R600a
Type of Climate	N
N.W. (kg)	32.5
G.W. (kg)	35
Overall Dimension (mm)	428x386x885
Package Dimension (mm)	475x432x993
20"Container	124
40"Container	258
40"Container (high)	258
Color	white/black/silver/red

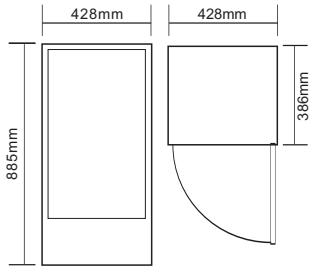

FCD07-68V2

Capacity-Gross (L)	68
Temperature Range (℃)	0-12
Rated Input Power (W)	180
Refrigerant	R134a/R600a
Type of Climate	N
N.W. (kg)	33.5
G.W. (kg)	36
Overall Dimension (mm)	428x386x1000
Package Dimension (mm)	475x432x1070
20"Container	124
40"Container	258
40"Container (high)	258
Color	white/black/silver/red

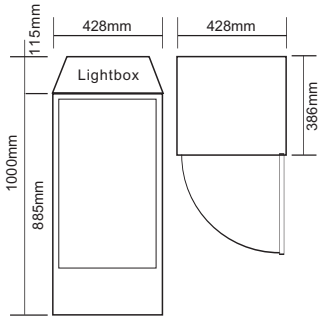

KARMA GLOBAL LTD.
info@karmaglobal.com
www.karmaglobal.com

Flat Glass Door

Lightbox

FCD07-78BV

FCD07-78BV2

FCD07-98BV

StandardFeatures:

- Internal top LED light
- Adjustable temperature controller
- Adjustable PVC coated shelves
- 4 sides double glass
- Maintenance free condenser
- Ventilated cooling system
- Automatic defrost
- Digital temperature controller and display
- CE

Digital Controller

Lockable

LED Lights

Internal LED Light

Shelf Clips

Options:

- Lockable Door
- Adjustable chrome plated shelves
- Bright internal LED illumination on sides
- Light display box with decal on top

FCD07-78BV

Capacity-Gross (L)	78
Temperature Range (℃)	0-12
Rated Input Power (W)	180
Refrigerant	R134a/R600a
Type of Climate	N
N.W. (kg)	33.8
G.W. (kg)	36.2
Overall Dimension (mm)	428x386x960
Package Dimension (mm)	475x432x1038
20"Container	124
40"Container	258
40"Container (high)	258
Color	white/black/silver/red

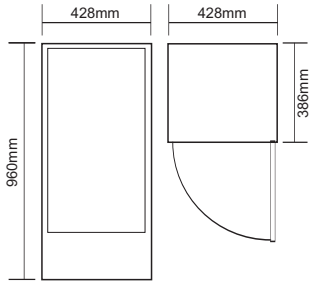

FCD07-78BV2

Capacity-Gross (L)	78
Temperature Range (℃)	0-12
Rated Input Power (W)	180
Refrigerant	R134a/R600a
Type of Climate	N
N.W. (kg)	34.8
G.W. (kg)	37.2
Overall Dimension (mm)	428x386x1075
Package Dimension (mm)	475x432x1145
20"Container	124
40"Container	258
40"Container (high)	258
Color	white/black/silver/red

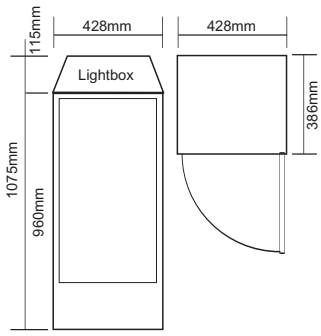

FCD07-98BV

Capacity-Gross (L)	98
Temperature Range (℃)	0-12
Rated Input Power (W)	180
Refrigerant	R134a/R600a
Type of Climate	N
N.W. (kg)	38
G.W. (kg)	40.5
Overall Dimension (mm)	428x386x1110
Package Dimension (mm)	475x432x1180
20"Container	62
40"Container	129
40"Container (high)	129
Color	white/black/silver/red

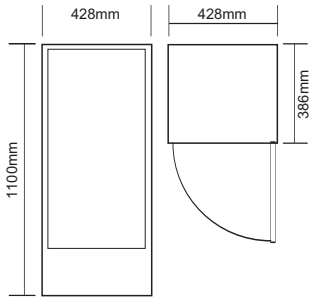

Flat Glass Door

FCD07-80V

Standard Features:
- Bright internal LED illumination on 2 sides
- Digital temperature controller and display
- Adjustable PVC coated shelves
- 4 sides Double glass
- Cooling system on top
- Maintenance free condenser
- Ventilated cooling system
- Automatic defrost
- CE

Options:
- Lockable Door
- Adjustable chrome plated shelves

FCD07-78BV8

Standard Features:
- Bright internal LED illumination on 4 sides
- Digital temperature controller and display
- Adjustable chrome plated shelves
- 4 sides double glass
- Maintenance free condenser
- Ventilated cooling system
- Automatic defrost
- Adjustable feet
- Stainless steel
- CE

Adjustable feet

Digital Controller

FCD07-108BV

Standard Features:
- Bright internal LED illumination on 2 sides
- Digital temperature controller and display
- Rotational chrome plated shelves
- 4 sides double Glass
- Adjustable feet
- Maintenance free condenser
- Ventilated cooling system
- Automatic defrost
- CE

FCD07-80V	
Capacity-Gross (L)	80
Temperature Range (℃)	0-12
Rated Input Power (W)	160/142
Refrigerant	R134a/R600a
Type of Climate	N
N.W. (kg)	37.5
G.W. (kg)	39.5
Overall Dimension (mm)	385x375x1040
Package Dimension (mm)	435x435x1085
20"Container	130
40"Container	260
40"Container (high)	260
Color	white/black/silver/red

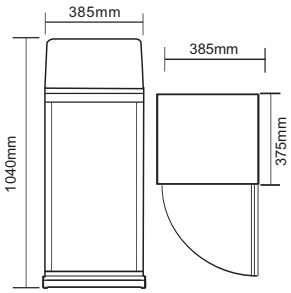

FCD07-78BV8	
Capacity-Gross (L)	78
Temperature Range (℃)	0-12
Rated Input Power (W)	180
Refrigerant	R134a/R600a
Type of Climate	N
N.W. (kg)	45.5
G.W. (kg)	48
Overall Dimension (mm)	430x390x986
Package Dimension (mm)	500x460x1010
20"Container	112
40"Container	230
40"Container (high)	230

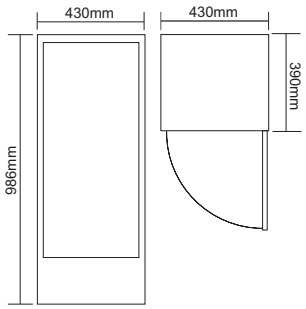

FCD07-108BV	
Capacity-Gross (L)	108
Temperature Range (℃)	0-12
Rated Input Power (W)	230
Refrigerant	R134a/R600a
Type of Climate	N
N.W. (kg)	52
G.W. (kg)	54
Overall Dimension (mm)	470x470x870
Package Dimension (mm)	560x530x938
20"Container	88
40"Container	176
40"Container (high)	176
Color	black\stainlss steel

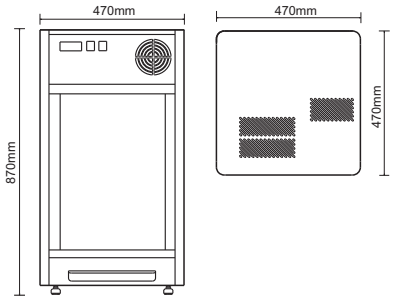

KARMA GLOBAL LTD.
info@karmaglobal.com
www.karmaglobal.com

Standing Display Refrigerator

FCD07-500AV

Standard Features:

- Bright internal LED illumination on sides
- Digital temperature controller and display
- Adjustable PVC coated shelves
- Front flat glass door
- 4 sides double glass
- 4 Castors, 2 with brakes
- Ventilated cooling system
- Automatic defrost
- CE

Options:

- Adjustable chrome plated shelves
- Lockable door

FCD07-500AV

Capacity-Gross (L)	500
Temperature Range (°C)	0-12
Rated Input Power (W)	580
Refrigerant	R404a
Type of Climate	N
N.W. (kg)	135
G.W. (kg)	144
Overall Dimension (mm)	650x650x1945
Package Dimension (mm)	735x735x1980
20"Container	24
40"Container	48
40"Container (high)	48
Color	white/black/silver/red

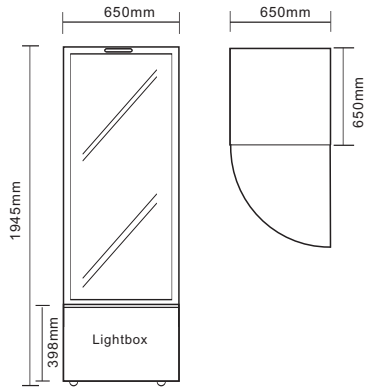

KARMA GLOBAL LTD.
info@karmaglobal.com
www.karmaglobal.com

Standing Display Refrigerator

FCD07-270BV

FCD07-270BA

Standard Features:

- Bright internal LED illumination under each shelf
- Digital temperature controller and display
- Adjustable chrome plated shelves
- Ventilated cooling system
- Automatic defrost
- 4 Castors, 2 with brakes
- Triple glass
- CE

Adjustable Shelf

Digital Controller

Adjustable Angles

FCD07-270BV	
Capacity-Gross (L)	270
Temperature Range (℃)	2-8
Rated Input Power (W)	410
Refrigerant	R134a/R600a
Type of Climate	N
N.W. (kg)	163.5
G.W. (kg)	172
Overall Dimension (mm)	915x675x1268.5
Package Dimension (mm)	965x725x1310
20"Container	17
40"Container	36
40"Container (high)	36

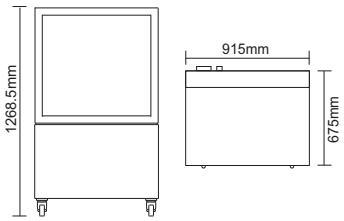

FCD07-270BA	
Capacity-Gross (L)	270
Temperature Range (℃)	2-8
Rated Input Power (W)	410
Refrigerant	R134a/R600a
Type of Climate	N
N.W. (kg)	163.5
G.W. (kg)	172
Overall Dimension (mm)	915x675x1275
Package Dimension (mm)	965x725x1310
20"Container	17
40"Container	36
40"Container (high)	36

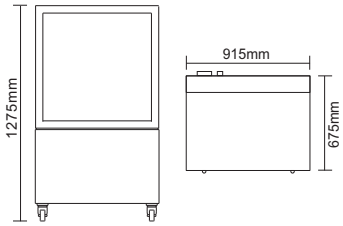

KARMA GLOBAL LTD. info@karmaglobal.com www.karmaglobal.com

Open Display

FCD07-180BV

FCD07-220BV

FCD07-220BV2

Standard Features:

- Bright internal LED illumination each shelf
- Digital temperature controller and display
- Stainless steel shelves
- 4 Castors with 2 brakes
- 2 Sides safety glass
- With night curtain
- Ventilated cooling system
- Automatic defrost
- Stainless steel
- CE

LED Lights

With Curtain

Digital Controller

Castors

FCD07-220BV2:Additional back evaporator,cool enough for dairy product.

FCD07-180BV	
Capacity-Gross (L)	180
Temperature Range (℃)	2-10
Rated Input Power (W)	1340
Refrigerant	R404a
Max.ambient Temp./RH	28℃/70%
N.W. (kg)	96
G.W. (kg)	100
Overall Dimension (mm)	600x494x1450
Package Dimension (mm)	666x560x1510
20"Container	36
40"Container	72
40"Container (high)	72

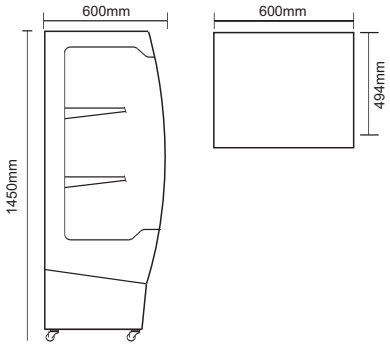

FCD07-220BV	
Capacity-Gross (L)	220
Temperature Range (℃)	2-10
Rated Input Power (W)	1340
Refrigerant	R404a
Max.ambient Temp./RH	28℃/70%
N.W. (kg)	106
G.W. (kg)	111
Overall Dimension (mm)	600x494x1740
Package Dimension (mm)	666x560x1808
20"Container	36
40"Container	72
40"Container (high)	72

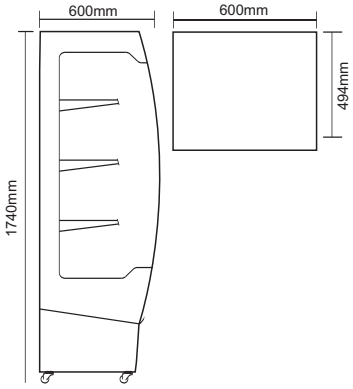

FCD07-220BV2	
Capacity-Gross (L)	220
Temperature Range (℃)	2-6
Rated Input Power (W)	1340
Refrigerant	R404a
Max.ambient Temp./RH	28℃/70%
N.W. (kg)	121
G.W. (kg)	127
Overall Dimension (mm)	670x512x1792
Package Dimension (mm)	740x585x1860
20"Container	30
40"Container	60
40"Container (high)	60

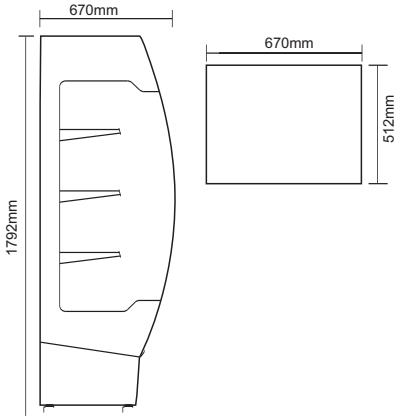

Countertop Display Refrigerator

Model	**RF100-108**
Description	Countertop Display Refrigerator
Volts	220~240V/50Hz
Power (W)	450
Capacity (L)	300
Shelves	2
Temperature Range	2~8℃
Dimensions (mm)	650x805x1245
N.W. (kg)	125
Certificate	CE

KARMA GLOBAL LTD. info@karmaglobal.com www.karmaglobal.com

Countertop Display Refrigerator

RF100-109

RF100-110

Model	RF100-109	RF100-110
Description	Countertop Display Refrigerator	Countertop Display Refrigerator
Volts	220~240V/50Hz	220~240V/50Hz
Power (W)	450	450
Capacity (L)	400	500
Shelves	2	2
Temperature Range	2~8℃	2~8℃
Dimensions (mm)	900x805x1245	1200x805x1245
N.W. (kg)	141	163
Certificate	CE	CE

KARMA GLOBAL LTD. info@karmaglobal.com www.karmaglobal.com

Salad Showcase

FCD07-1/4X5

Standard Features:
- Digital temperature controller and display
- 4 sides glass
- Direct cooling system
- Automatic defrost
- 5X1/4 GN plate
- Stainless steel
- CE

FCD07-1/3X4

Standard Features:
- Digital temperature controller and display
- 4 sides glass
- Direct cooling system
- Automatic defrost
- 4X1/3 GN plate
- Stainless steel
- CE

FCD07-1/4X5

Capacity-Gross (L)	5x1/4 GN
Temperature Range (℃)	0-12
Rated Input Power (W)	140/110
Refrigerant	R134a/R600a
Type of Climate	4
N.W. (kg)	34.8
G.W. (kg)	38
Overall Dimension (mm)	1200x335x225
Package Dimension (mm)	1275x410x330
20"Container	154
40"Container	315
40"Container (high)	368

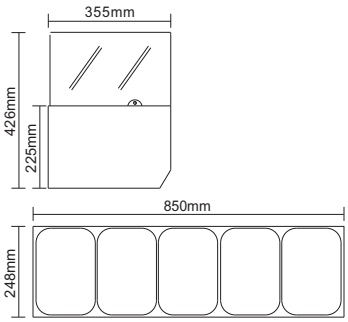

FCD07-1/3X4

Capacity-Gross (L)	4x1/3 GN
Temperature Range (℃)	0-12
Rated Input Power (W)	140/110
Refrigerant	R134a/R600a
Type of Climate	4
N.W. (kg)	40.5
G.W. (kg)	42.5
Overall Dimension (mm)	1200x395x225
Package Dimension (mm)	1275x470x330
20"Container	140
40"Container	294
40"Container (high)	336

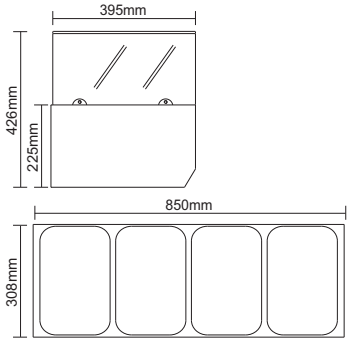

KARMA GLOBAL LTD.
info@karmaglobal.com
www.karmaglobal.com

Salad Showcase

FCD07-1/4X7

Standard Features:
- Digital temperature controller and display
- 4 sides glass
- Direct cooling system
- Automatic defrost
- 7X1/4 GN plate
- Stainless steel
- CE

FCD07-1/3X6

Standard Features:
- Digital temperature controller and display
- 4 sides glass
- Direct cooling system
- Automatic defrost
- 6X1/3 GN plate
- Stainless steel
- CE

FCD07-1/4X7

Capacity-Gross (L)	7x1/4 GN
Temperature Range (℃)	0-12
Rated Input Power (W)	157/125
Refrigerant	R134a/R600a
Type of Climate	4
N.W. (kg)	43.5
G.W. (kg)	45.5
Overall Dimension (mm)	1500x335x225
Package Dimension (mm)	1575x410x330
20"Container	119
40"Container	252
40"Container (high)	288

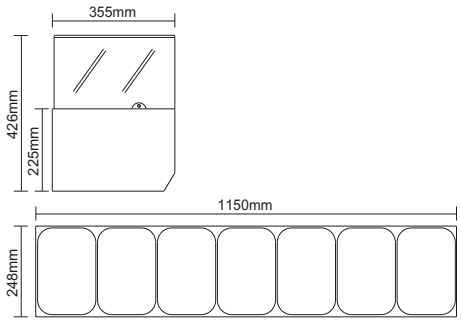

FCD07-1/3X6

Capacity-Gross (L)	6x1/3 GN
Temperature Range (℃)	0-12
Rated Input Power (W)	157/125
Refrigerant	R134a/R600a
Type of Climate	4
N.W. (kg)	45.8
G.W. (kg)	48
Overall Dimension (mm)	1500x395x225
Package Dimension (mm)	1575x470x330
20"Container	105
40"Container	217
40"Container (high)	248

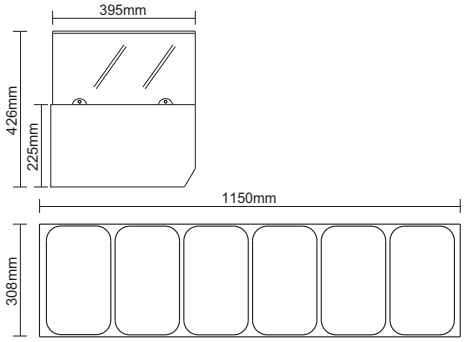

KARMA GLOBAL LTD.
info@karmaglobal.com
www.karmaglobal.com

Sushi Showcase

Option:

Light box for advertisement

Model	RF100-179	RF100-180
Description	Sushi Showcase	Sushi Showcase
Volts	220~240V/50Hz	220~240V/50Hz
Power (W)	160	160
Class mate	3	S/S #304
Refrigerant	R134a/R600a	R134a/R600a
Temperature Range	0~12℃	0~12℃
Capacity-gross	6*1/3GN plate	5*1/2GN plate
Dimensions (mm)	1483x450x330	1754x450x330
N.W. (kg)	39	44
Certificate	CE	CE

KARMA GLOBAL LTD. info@karmaglobal.com www.karmaglobal.com

Sushi Showcase

RF100-174

Standard Features:
- Bright internal LED illumination on top
- Digital temperature controller and display
- Front curved glass
- Sliding doors
- Direct cooling system
- Automatic defrost
- Top evaporator with basin to collect condensation
- GN pan can be ordered.
- CE

RF100-175

Standard Features:
- Bright internal LED illumination on top
- Digital temperature controller and display
- Front curved glass
- Sliding doors
- Direct cooling system
- Automatic defrost
- Top evaporator with basin to collect condensation
- GN pan can be ordered.
- CE

RF100-174

Capacity-Gross (L)	4*1/3 GN plate
Temperature Range (℃)	0-12
Rated Input Power (W)	125
Refrigerant	R134a/R600a
Type of Climate	4
N.W. (kg)	34.5
G.W. (kg)	36.5
Overall Dimension (mm)	1177x420x265
Package Dimension (mm)	1267x510x360
20"Container	114
40"Container	246
40"Container (high)	287

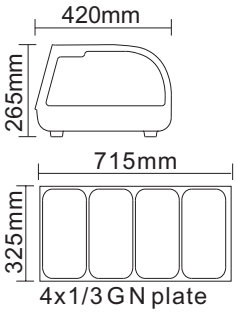

RF100-175

Capacity-Gross (L)	5*1/3 GN plate
Temperature Range(℃)	0-12
Rated Input Power (W)	135
Refrigerant	R134a/R600a
Type of Climate	4
N.W. (kg)	38.5
G.W. (kg)	40.5
Overall Dimension (mm)	1352x420x265
Package Dimension (mm)	1443x510x360
20"Container	96
40"Container	192
40"Container (high)	224

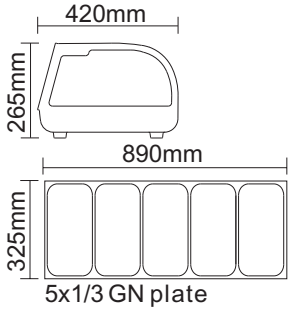

Sushi Showcase

RF100-176

Standard Features:
- Bright internal LED illumination on top
- Digital temperature controller and display
- Front curved glass
- Sliding doors
- Direct cooling system
- Automatic defrost
- Top evaporator with basin to collect condensation
- GN pan can be ordered.
- CE

RF100-177

Standard Features:
- Bright internal LED illumination on top
- Digital temperature controller and display
- Front curved glass
- Sliding doors
- Direct cooling system
- Automatic defrost
- Top evaporator with basin to collect condensation
- GN pan can be ordered.
- CE

RF100-176

Capacity-Gross (L)	6*1/3 GN plate
Temperature Range (℃)	0-12
Rated Input Power (W)	145
Refrigerant	R134a/R600a
Type of Climate	4
N.W. (kg)	41.5
G.W. (kg)	44
Overall Dimension (mm)	1529x420x265
Package Dimension (mm)	1619x510x360
20"Container	84
40"Container	180
40"Container (high)	210

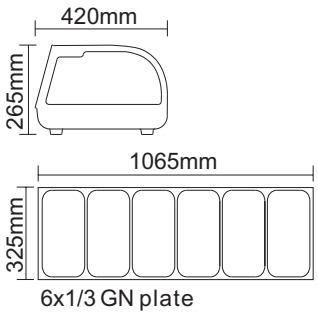

RF100-177

Capacity-Gross (L)	5*1/2 GN plate
Temperature Range (℃)	0-12
Rated Input Power (W)	160/180
Refrigerant	R134a/R600a
Type of Climate	4
N.W. (kg)	45
G.W. (kg)	49
Overall Dimension (mm)	1800x420x265
Package Dimension (mm)	1890x510x360
20"Container	78
40"Container	162
40"Container (high)	188

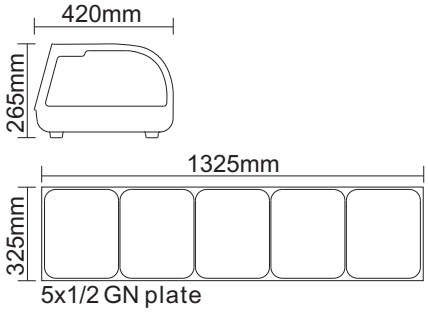

Cold Showcase

FCD02-530V

Model	FCD02-530V	FCD02-540V	FCD02-550V
Description	Countertop Cold Deli Showcase	Countertop Cold Deli Showcase	Countertop Cold Deli Showcase
Volts	220~240V/50Hz	220~240V/50Hz	220~240V/50Hz
Power (W)	420	550	570
Capacity (L)	140	190	240
Shelves	2	2	2
Temperature Range	2~8℃	2~8℃	2~8℃
Dimensions (mm)	900x540x790	1200x540x790	1500x540x790
N.W. (kg)	90	115	120
Certificate	CE	CE	CE

KARMA GLOBAL LTD. info@karmaglobal.com www.karmaglobal.com

Cold Showcase

FCD02-A550V2

Model	FCD02-A530V2	FCD02-A540V2	FCD02-A550V2
Description	Countertop Cold Deli Showcase	Countertop Cold Deli Showcase	Countertop Cold Deli Showcase
Volts	220~240V/50Hz	220~240V/50Hz	220~240V/50Hz
Power (W)	485	598	626
Capacity (L)	192	260	330
Shelves	3	3	3
Temperature Range	2~8℃	2~8℃	2~8℃
Dimensions (mm)	900x540x930	1200x540x930	1500x540x930
N.W. (kg)	140	170	199
Certificate	CE	CE	CE

KARMA GLOBAL LTD. info@karmaglobal.com www.karmaglobal.com

Cold Showcase

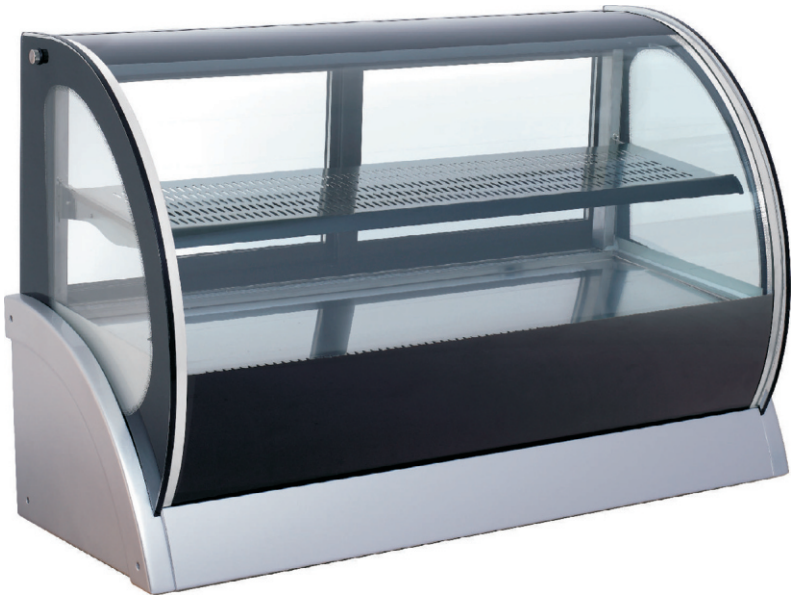

FCD02-S540A

Model	FCD02-S530A	FCD02-S540A	FCD02-S550A
Description	Countertop Cold Deli Showcase	Countertop Cold Deli Showcase	Countertop Cold Deli Showcase
Volts	220~240V/50Hz	220~240V/50Hz	220~240V/50Hz
Power (W)	420	550	570
Capacity (L)	115	155	200
Shelves	2	2	2
Temperature Range	2~8℃	2~8℃	2~8℃
Dimensions (mm)	900x540x790	1200x540x790	1500x540x790
N.W. (kg)	90	115	120
Certificate	CE	CE	CE

KARMA GLOBAL LTD. info@karmaglobal.com www.karmaglobal.com

Cold Showcase

FCD02-550A

Model	FCD02-530A	FCD02-540A	FCD02-550A
Description	Countertop Cold Deli Showcase	Countertop Cold Deli Showcase	Countertop Cold Deli Showcase
Volts	220~240V/50Hz	220~240V/50Hz	220~240V/50Hz
Power (W)	420	550	570
Capacity (L)	70	94	118
Shelves	2	2	2
Temperature Range	2~8℃	2~8℃	2~8℃
Dimensions (mm)	900x530x820	1200x530x820	1500x530x820
N.W. (kg)	90	115	120
Certificate	CE	CE	CE

KARMA GLOBAL LTD. info@karmaglobal.com www.karmaglobal.com

Cold Showcase

FCD03-540V

Model	FCD03-530V	FCD03-540V	FCD03-550V
Description	Countertop Cold Deli Showcase	Countertop Cold Deli Showcase	Countertop Cold Deli Showcase
Volts	220~240V/50Hz	220~240V/50Hz	220~240V/50Hz
Power (W)	421	487	573
Capacity (L)	140	190	240
Shelves (pans)	4	5	7
Temperature Range	-15~-20℃	-15~-20℃	-15~-20℃
Dimensions (mm)	900x540x790	1200x540x790	1500x540x790
N.W. (kg)	90	115	120
Certificate	CE	CE	CE

KARMA GLOBAL LTD. info@karmaglobal.com www.karmaglobal.com

Standing Display Refrigerator

RF100-103

RF100-104

Model	RF100-103	RF100-104
Description	Display Refrigerator	Display Refrigerator
Volts	220~240V/50Hz	220~240V/50Hz
Power(W)	410	410
Capacity(L)	370	370
Shelves	2	2
Temperature Range	2~8℃	2~8℃
Dimensions(mm)	1215x675x1269	1215x675x1269
N.W.(NJ)	183	183
Certificate	CE	CE

KARMA GLOBAL LTD. info@karmaglobal.com www.karmaglobal.com

Standing Display Refrigerator

RF100-105

RF100-106

Model	RF100-105	RF100-106
Description	Display Refrigerator	Display Refrigerator
Volts	220~240V/50Hz	220~240V/50Hz
Power(W)	410	410
Capacity(L)	470	470
Shelves	2	2
Temperature Range	2~8℃	2~8℃
Dimensions(mm)	1500x730x1160	1500x730x1160
N.W.(NJ)	204	204
Certificate	CE	CE

KARMA GLOBAL LTD. info@karmaglobal.com www.karmaglobal.com

Countertop Refrigerator

Standard Features:

- Digital temperature controller and display
- 8*16 GN PAN or 4*1/3 GN PAN
- Automatic defrost
- Direct cooling system
- Stainless Steel
- Folding complete glass coner
- On/off switch
- Adjustable feet
- CE

Options: Plastic Chopping board

RF100-111

Capacity-Gross (L)	67
Temperature Range (℃)	2-12
Rated Input Power (W)	110/105
Refrigerant	R134a/R600a
Class mate	4
N.W. (kg)	25
G.W. (kg)	27
Overall Dimension (mm)	767×612×328
Package Dimension (mm)	840×690×390
20” Container	105
40” Container	215
40” Container(high)	258

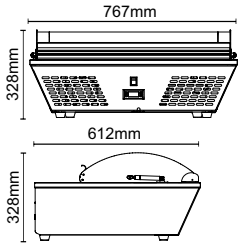

KARMA GLOBAL LTD.
info@karmaglobal.com
www.karmaglobal.com

Cool Display

RF100-113

RF100-114

Standard Features:

- Bright internal LED illumination on top
- Digital temperature controller and display
- Double glass
- Automatic closing door
- Adjustable PVC coated shelf
- Adjustable feet
- Frost free defrost system
- Automatic defrost
- With overall polyurethane foam
- CE

RF100-113

Capacity-Gross (L)	49
Temperature Range (℃)	2-8
Rated Input Power (W)	130
Refrigerant	R134a
Type of Climate	4
N.W. (kg)	40
G.W. (kg)	42
Overall Dimension (mm)	570x533x530
Package Dimension (mm)	630x593x590
20"Container	81
40"Container	171
40"Container (high)	228

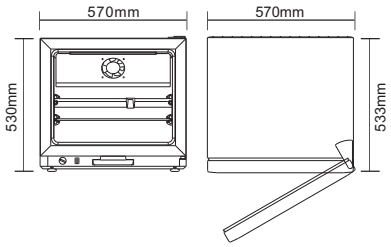

RF100-114

Capacity-Gross (L)	99
Temperature Range (℃)	2-8
Rated Input Power (W)	150
Refrigerant	R134a
Type of Climate	4
N.W. (kg)	46
G.W. (kg)	48.5
Overall Dimension (mm)	570x550x730
Package Dimension (mm)	630x610x790
20"Container	54
40"Container	114
40"Container (high)	171

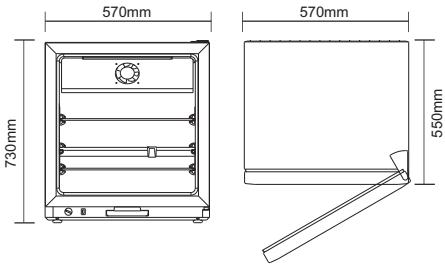

KARMA GLOBAL LTD.
info@karmaglobal.com
www.karmaglobal.com

Cool Display

RF100-115

RF100-116

Standard Features:

- Bright internal LED illumination on top
- Digital temperature controller and display
- Double glass
- Automatic closing door
- Adjustable PVC coated shelf
- Adjustable feet
- Frost free defrost system
- Automatic defrost
- With overall polyurethane foam
- CE

RF100-115

Capacity-Gross (L)	49
Temperature Range (°C)	2-8
Rated Input Power (W)	150
Refrigerant	R134a
Type of Climate	4
N.W. (kg)	43
G.W. (kg)	45
Overall Dimension (mm)	620x543x690
Package Dimension (mm)	680x603x750
20"Container	81
40"Container	171
40"Container (high)	171

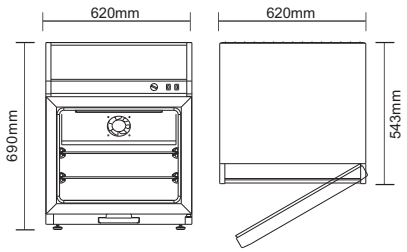

RF100-116

Capacity-Gross (L)	99
Temperature Range (°C)	2-8
Rated Input Power (W)	150
Refrigerant	R134a
Type of Climate	4
N.W. (kg)	50
G.W. (kg)	53
Overall Dimension (mm)	620x560x890
Package Dimension (mm)	680x620x950
20"Container	54
40"Container	114
40"Container (high)	114

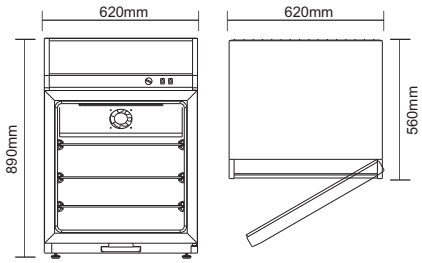

KARMA GLOBAL LTD.
info@karmaglobal.com
www.karmaglobal.com

Cool Display

RF100-117

RF100-118

Standard Features:

- Bright internal LED illumination on top
- Digital temperature controller and display
- Double glass
- Automatic closing door
- Adjustable PVC coated shelf
- Adjustable feet
- Frost free defrost system
- Automatic defrost
- With overall polyurethane foam
- CE

RF100-117

Capacity-Gross (L)	91
Temperature Range (℃)	2-12
Rated Input Power (W)	200
Refrigerant	R134a
Type of Climate	4
N.W. (kg)	59
G.W. (kg)	63
Overall Dimension (mm)	910× 510× 550
Package Dimension (mm)	980× 580× 600
20"Container	60
40"Container	129
40"Container (high)	172

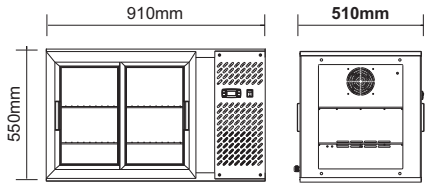

RF100-118

Capacity-Gross (L)	101
Temperature Range (℃)	2-12
Rated Input Power (W)	230
Refrigerant	R134a
Type of Climate	4
N.W. (kg)	58
G.W. (kg)	63
Overall Dimension (mm)	805× 410× 703
Package Dimension (mm)	875× 480× 753
20"Container	83
40"Container	189
40"Container (high)	189

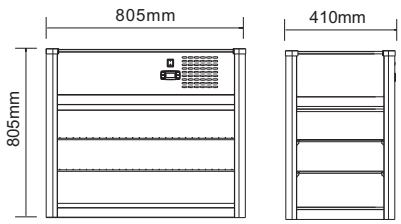

KARMA GLOBAL LTD.
info@karmaglobal.com
www.karmaglobal.com

Cool Display

RF100-119

Standard Features:

- Bright internal LED illumination on sides
- Digitaltemperature controller and display
- Cooling system on top
- 4 adjustable glass shelves
- Front flat glass door
- 4 sides double glass
- 4 castors, 2 with brakes
- On / Off Switch
- Ventilated cooling system
- Automatic defrost
- CE

RF100-119	
Capacity-Gross (L)	450
Temperature Range (℃)	2-8
Rated Input Power (W)	480
Refrigerant	R134a
Type of Climate	6
N.W. (kg)	163
G.W. (kg)	186
Overall Dimension (mm)	656x653x1892
Package Dimension (mm)	756x753x2012
20" Container	21
40" Container	45
40" Container(high)	45

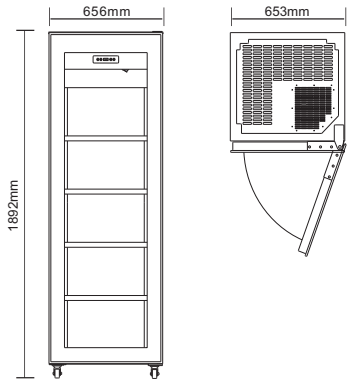

Standing Display Refrigerator

RF100-120

RF100-121

Standard Features:

- Bright internal LED illumination on sides
- Digital temperature controller and display
- Adjustable chrome plated shelves
- Front flat glass door
- 4 sides triple glass
- 4 castors, 2 with brakes
- On / Off Switch
- Ventilated cooling system
- Automatic defrost
- Stainless Steel
- CE

Digital Controller

LED Lights

Castors

RF100-120

Capacity-Gross (L)	270
Temperature Range℃	0-10
Rated Input Power(W)	420
Refrigerant	R134
Type of Climate	6
N.W.(kg)	140
G.W.(kg)	165
Overall Dimension(mm)	650× 650× 1500
Package Dimension(mm)	749× 749× 1530
20"Container	21
40"Container	45
40"Container(high)	45

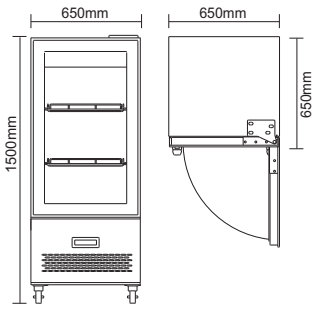

RF100-121

Capacity-Gross (L)	350
Temperature5range℃	0-10
Rated ,nput 3ower(W)	420
Refrigerant	R134
Type of Climate	6
N.W.(kg)	152
G.W.(kg)	165
Overall 'imension(mm)	850× 650× 1500
Package 'imension(mm)	949× 749× 1530
20"Container	18
40"Container	36
	36

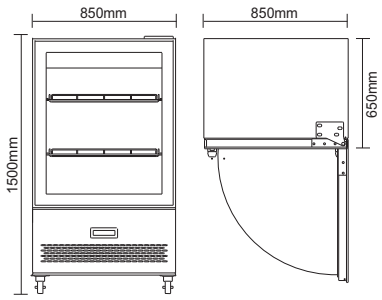

KARMA GLOBAL LTD.
info@karmaglobal.com
www.karmaglobal.com

Standing Display Refrigerator

RF100-122

RF100-123

Standard Features:

- ·Bright internal LED illumination on sides
- ·Digital temperature controller and display
- ·Adjustable chrome plated shelves
- ·Front flat glass door
- ·4 sides triple glass
- ·4 castors, 2 with brakes
- ·On/Off switch
- ·Ventilated cooling system
- ·Automatic defrost
- ·Stainless Steel
- ·CE

Digital Controller

LE D Lights

Castors

RF100-122

Capacity-Gross (L)	400
Temperature 5ange℃	0-10
Rated ,Input Power(W)	420
Refrigerant	R134
Type of Climate	6
N.W.(kg)	175
G.W.(kg)	205
Overall Dimension(mm)	650×650×1908
Package Dimension(mm)	749×749×1930
20"Container	21
40"Container	45
40"Container(high)	45

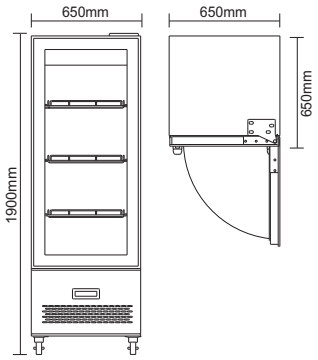

RF100-123

Capacity-Gross (L)	550
Temperature 5ange ℃	0-10
Rated ,Input Power(W)	420
Refrigerant	R134
Type of Climate	6
N.W.(kg)	192
G.W.(kg)	227
Overall Dimension(mm)	850×650×1908
Package Dimension(mm)	949×749×1930
20"Container	18
40"Container	36
40"Container(high)	36

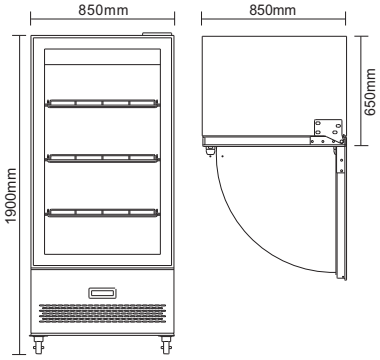

Refrigerated Showcase

RF100-124

RF100-125

Standard Features:

- Bright internal LED illumination on the top
- Digital temperature control and display
- Top evaporator with basin to collect condensation
- Direct cooling system
- Automatic defrost
- Single glass
- Front curved glass
- Sliding door
- Trolley optional
- GN pan can be ordered.
- CE

LED Lights

Digital Controller

RF100-124

Capacity-Gross (L)	175
Temperature Range (℃)	2-12
Rated Input Power (W)	200
Refrigerant	R134a/R600a
Type of Climate	N
N.W. (kg)	66
G.W. (kg)	70
Overall Dimension (mm)	890×890×542/1080
Package Dimension(mm)	960×960×668
20"Container	30
40"Container	72
40"Container (high)	96

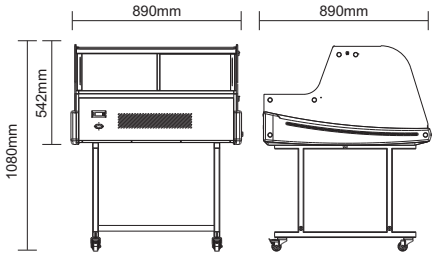

RF100-125

Capacity-Gross (L)	255
Temperature Range (℃)	2-12
Rated Input Power (W)	200
Refrigerant	R134a/R600a
Type of Climate	N
N.W. (kg)	84
G.W. (kg)	88
Overall Dimension (mm)	1250×890×542/1080
Package Dimension (mm)	1300×960×668
20"Container	27
40"Container	63
40"Container (high)	84

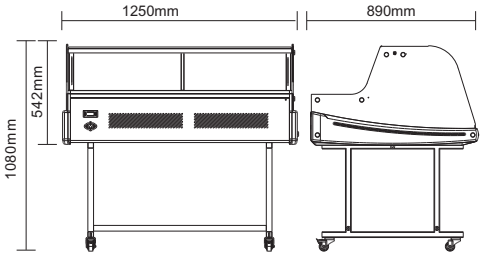

KARMA GLOBAL LTD.
info@karmaglobal.com
www.karmaglobal.com

Countertop Displays

RF100-126

Standard Features:

- Digital temperature controller and display
- Automatic defrost
- Direct cooling system
- Stainless Steel
- Folding complete glass cover
- On/off switch
- Adjustable feet
- CE

RF100-127

Standard Features:

- Digital temperature controller and display
- Automatic defrost
- Direct cooling system
- Single tempered glass
- Stainless steel base panel
- CE

Digital Controller

RF100-126

Capacity-Gross (L)	118
Temperature Range (℃)	2-12
Rated Input Power (W)	110/105
Refrigerant	R134a/R600a
Type of Climate	4
N.W. (kg)	38.5
G.W. (kg)	41
Overall Dimension (mm)	695*882*417
Package Dimension (mm)	775*955*490
20" Container	56
40" Container	112
40" Container (high)	140

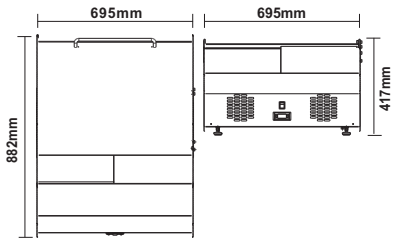

RF100-127

Capacity-Gross (L)	128
Temperature Range (℃)	2-12
Rated Input Power (W)	110/105
Refrigerant	R134a/R600a
Type of Climate	4
N.W. (kg)	42
G.W. (kg)	45
Overall Dimension (mm)	685*874*419
Package Dimension (mm)	775*955*490
20" Container	56
40" Container	112
40" Container (high)	140

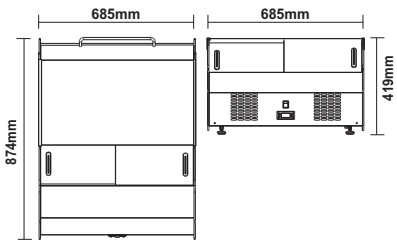

KARMA GLOBAL LTD. info@karmaglobal.com www.karmaglobal.com

Countertop Displays

RF100-178

Standard Features:

- Digital temperature controller and display
- Automatic defrost
- Direct cooling system
- Single tempered glass
- Stainless steel base panel
- CE

RF100-178	
Capacity-Gross (L)	40
Temperature Range ℃	2-12
Rated Input Power (W)	110/105
Refrigerant	R134a/R600a
Type of Climate	4
N.W.(kg)	25
G.W.(kg)	27
Overall Dimension (mm)	680*575*335
Package Dimension (mm)	730*650*400
20" Container	120
40" Container	255
40" Container (high)	306

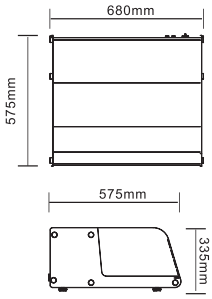

KARMA GLOBAL LTD.
info@karmaglobal.com
www.karmaglobal.com

Countertop Displays

RF100-129

RF100-130

Standard Features:

- ·Bright internal LED illumination on the top
- ·Temperature controller and display
- ·Adjustable chrome plated shelves
- ·4 sides double glass
- ·Sliding doors
- ·Ventilated cooling system
- ·Automatic defrost
- ·Stainless steel
- ·2 Bracket levels for adjusting the angle of the shelf
- ·CE

LED Lights

Adjustable Shelf

Digital Controller

RF100-129

Capacity-Gross (L)	130
Temperature Range℃	0-12
Rated Input Power (W)	230/200
Refrigerant	R134a/R600a
Type of Climate	4
N.W.(kg)	66
G.W.(kg)	68
Overall Dimension(mm)	797× 590× 685
Package Dimension(mm)	873× 642× 735
20"Container	60
40"Container	132
40"Container(high)	132

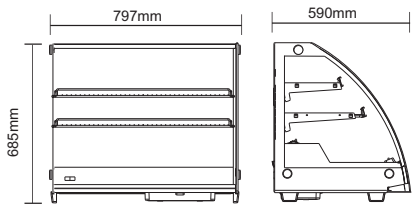

RF100-130

Capacity-Gross (L)	201
Temperature Range℃	0-12
Rated Input Power (W)	375
Refrigerant	R134a
Type of Climate	4
N.W.(kg)	84.5
G.W.(kg)	87
Overall Dimension(mm)	1217× 590× 685
Package Dimension(mm)	1293× 642× 735
20"Container	36
40"Container	81
40"Container(high)	81

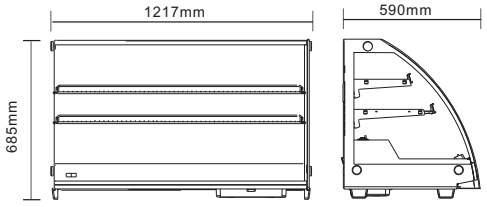

KARMA GLOBAL LTD. info@karmaglobal.com www.karmaglobal.com

Open Displays

RF100-131

RF100-132

Standard Features:

- Bright internal LED illumination each shelf Digital
- Temperature controller and display
- Stainless steel shelves
- 4 Castors with 2 brakes
- 2 Sides with safety glass
- With night curtain
- Ventilated cooling system
- Automatic defrost
- Stainless steel
- CE

LED Lights

With Curtain

Digital Controller

Castors

RF100-131

Capacity-Gross (L)	200
Temperature Range℃	2-10
Rated Input Power (W)	1340
Refrigerant	R404a
Type of Climate	6
N.W.(kg)	115
G.W.(kg)	121
Overall Dimension(mm)	1000× 560× 1250
Package Dimension(mm)	1075× 635× 1310
20"Container	19
40"Container	40
40"Container(high)	40

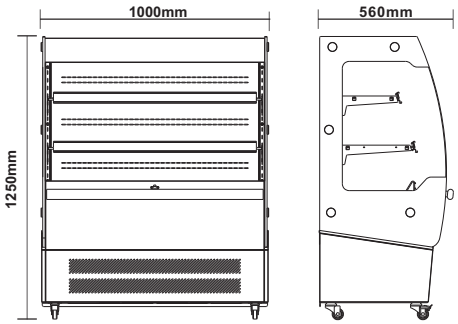

RF100-132

Capacity-Gross (L)	1900
Temperature Range℃	2-10
Rated Input Power (W)	800
Refrigerant	R404a
Type of Climate	6
N.W.(kg)	96
G.W.(kg)	105
Overall Dimension(mm)	780× 700× 1473
Package Dimension(mm)	840× 760× 1520
20"Container	19
40"Container	40
40"Container(high)	40

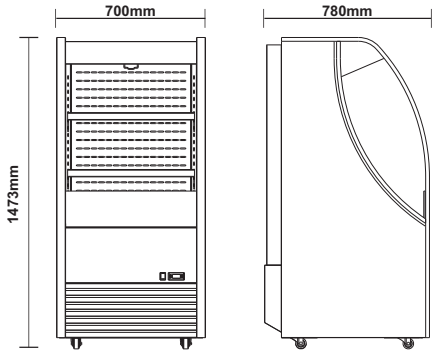

KARMA GLOBAL LTD.
info@karmaglobal.com
www.karmaglobal.com

Open Displays

RF100-133

Standard Features:

- Bright internal LED lighting on top and each shelf
- Digital temperature controller and display
- 4 castors with 2 brakes
- Side single tempered glass
- With night curtain
- Ventilated cooling system
- Automatic defrost
- Filter mesh in front of the base
- Adjustable shelves
- Condensator at back side, free maintenance
- CE

OPTION: Light Box On Top

RF100-134

Standard Features:

- Bright internal LED lighting at 2 front sides
- Digital temperature controller and display
- 4 castors with 2 brakes
- Double tempered glass
- With night curtain
- Ventilated cooling system
- Automatic defrost
- Filter mesh in front of the base
- Adjustable shelves
- Condensator at back side, free maintenance

RF100-133

Capacity-Gross (L)	360
Temperature Range (℃)	2-10
Rated Input Power (W)	1400
Refrigerant	R404a
Type of Climate	6
N.W. (kg)	125
G.W. (kg)	145
Overall Dimension (mm)	876*945*1520
Package Dimension (mm)	1020*940*1570
20" Container	12
40" Container	24
40" Container (high)	24

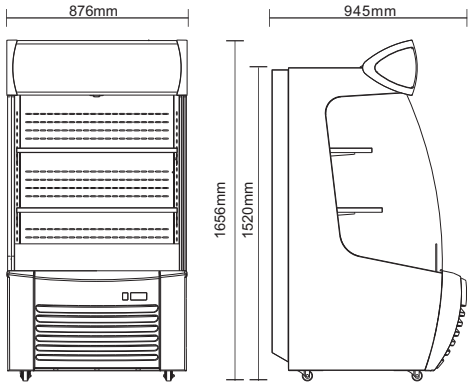

RF100-134

Capacity-Gross (L)	390
Temperature Range (℃)	2-10
Rated Input Power (W)	1400
Refrigerant	R404a
Type of Climate	6
N.W. (kg)	123
G.W. (kg)	143
Overall Dimension (mm)	920*847*1510
Package Dimension (mm)	990*920*1580
20" Container	12
40" Container	24
40" Container (high)	24

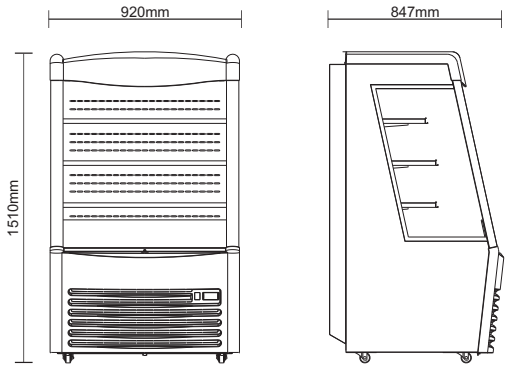

Open Displays

RF100-135

RF100-136

Standard Features:

- ·Bright internal LED lighting on top and bottom
- ·Digital temperature controller and display
- ·4 castors with 2 brakes
- ·Double tempered glass
- ·With night curtain
- ·Ventilated cooling system
- ·Automatic defrost
- ·Filter mesh in front of the base
- ·Adjustable shelves
- ·Condensator at back side, free maintenance
- ·CE

LED Lights

With Curtain

Digital Controller

Castors

RF100-135

Capacity-Gross (L)	230
Temperature Range (℃)	2-10
Rated Input Power (W)	1340
Refrigerant	R404a
Type of Climate	6
N.W. (kg)	82
G.W. (kg)	102
Overall Dimension (mm)	600*890*1520
Package Dimension (mm)	660*950*1590
20"Container	20
40"Container	41
40"Container (high)	41

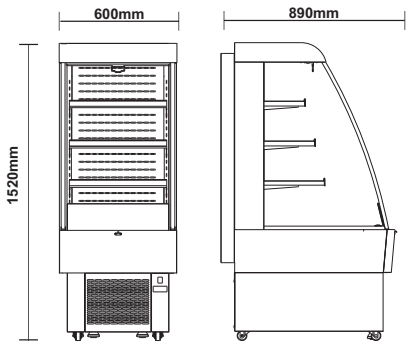

RF100-136

Capacity-Gross (L)	380
Temperature Range (℃)	2-10
Rated Input Power (W)	1400
Refrigerant	R404a
Type of Climate	6
N.W. (kg)	107
G.W. (kg)	129
Overall Dimension (mm)	1000*890*1520
Package Dimension (mm)	1060*950*1590
20"Container	12
40"Container	24
40"Container (high)	24

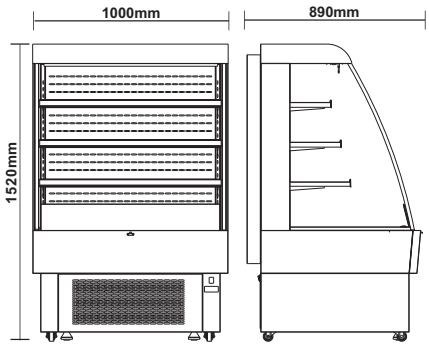

KARMA GLOBAL LTD. info@karmaglobal.com www.karmaglobal.com

Open Displays

RF100-137

RF100-138

Standard Features:

- Bright internal LED illumination under each shelf
- Digital temperature control and display
- Stainless steel shelves
- 4 castors with 2 brakes
- Tempered glass
- Stainless steel louver
- With curtain
- Ventilated cooling system
- Automatic defrost
- CE

RF100-137

Capacity-Gross (L)	435
Temperature Range (℃)	2-10
Rated Input Power (W)	2650
Refrigerant	R404a
Max.ambient Temp./RH	27℃/70%
N.W. (kg)	137
G.W. (kg)	155
Overall Dimension (mm)	762x765x2070
Package Dimension (mm)	792x795x2100
20"Container	14
40"Container	28
40"Container (high)	28

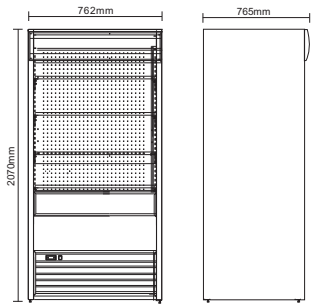

RF100-138

Capacity-Gross (L)	530
Temperature Range (℃)	2-10
Rated Input Power (W)	2650
Refrigerant	R404a
Max.ambient Temp./RH	27℃/70%
N.W. (kg)	154
G.W. (kg)	175
Overall Dimension (mm)	915× 765× 2070
Package Dimension (mm)	945× 795× 2100
20"Container	14
40"Container	28
40"Container (high)	28

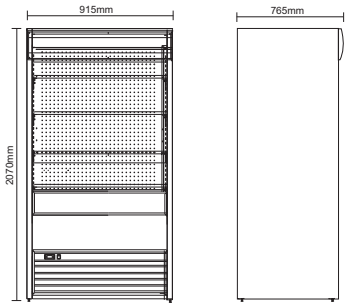

KARMA GLOBAL LTD. info@karmaglobal.com www.karmaglobal.com

Salad Showcase

RF100-141

RF100-142

Standard Features:

- Digital temperature control and display
- With overall polyurethane foam
- Glass cover with electric heating film
- Bright internal LED illumination on top and bottom
- Ventilated cooling system
- CE

RF100-141

Capacity-Gross (L)	122
Temperature Range(℃)	-18~-22
Rated Input Power (W)	660
Refrigerant	R134a
Type of Climate	4
N.W.(kg)	162
G.W.(kg)	170
Overall Dimension(mm)	1220x680x740
Package Dimension(mm)	1270x730x790
20"Container	24
40"Container	54
40"Container(high)	81

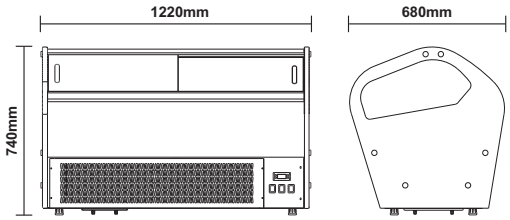

RF100-142

Capacity-Gross (L)	142
Temperature Range(℃)	-18~-22
Rated Input Power (W)	660
Refrigerant	R134a
Type of Climate	4
N.W.(kg)	167
G.W.(kg)	175
Overall Dimension(mm)	1420x680x740
Package Dimension(mm)	1470x730x790
20"Container	20
40"Container	44
40"Container(high)	66

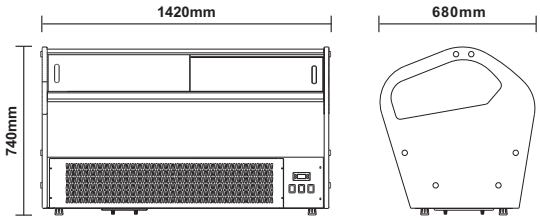

KARMA GLOBAL LTD.
info@karmaglobal.com
www.karmaglobal.com